3. Installation

3-1. Connections

3-1-1. Connection Diagram

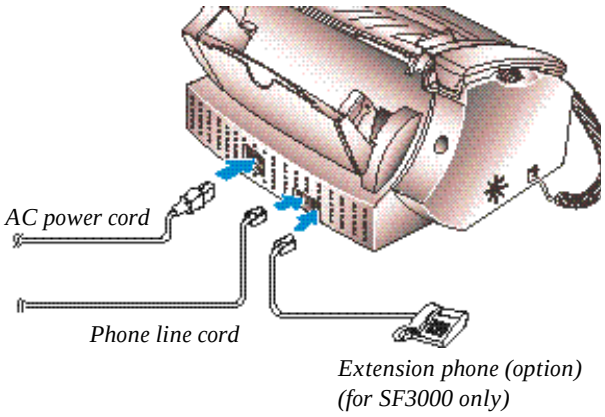

3-1-2. Handset

Plug one end of the coiled cord into the jack on the handset, the other end into the modular jack on the left side of the machine.

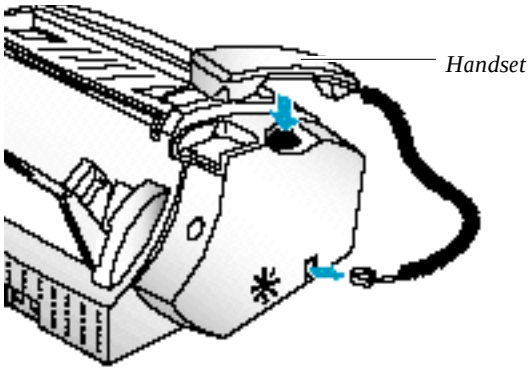

3-1-3. Document Tray

1. Insert the two tabs on the document tray into the slot on top of your machine.

2. Fold out the extender on the document tray, if necessary.

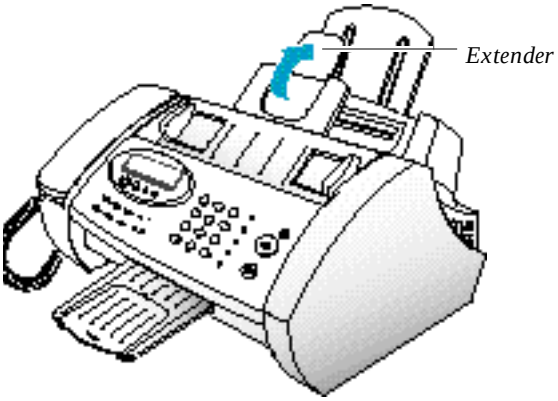

3-1-4 Document Exit Tray

1. Insert the two tabs on the document exit tray into the slots on the front of your machine.

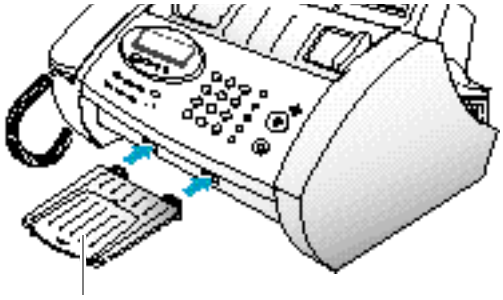

2. Fold out the extender, if necessary.

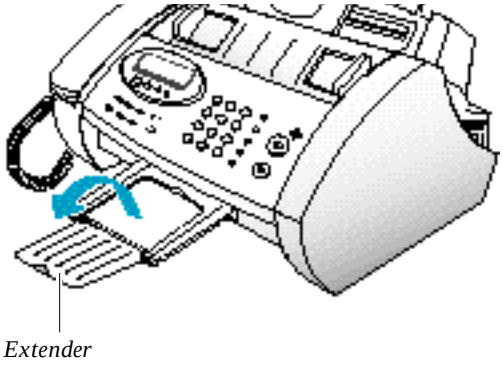

3-1-5. Telephone Line

Plug one end of the telephone line cord into the TEL. LINE jack,the other end into a standard phone wall jack.

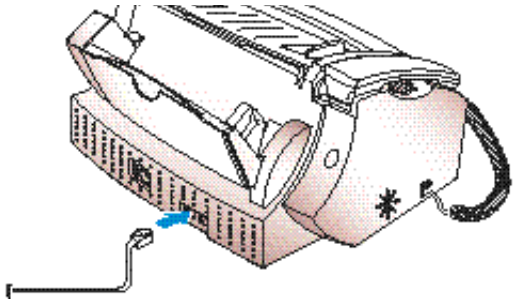

3-1-6. Extension Phone (Optional)

(SF3000 only)

Plug one end of the cord of your extension phone into the TAM lead and the plug of the TAM lead into the socket marked EXT. LINE on the back of the machine.

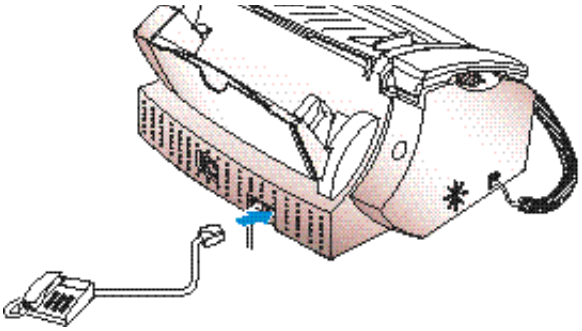

3-1-7. AC Power Cord

Plug one end of the cord into the back of the machine, and the other into a standard, grounded 3-pin AC socket (220 - 240 V, 50 - 60 Hz).

The machine turns on and the LCD displays ‘SYSTEM INITIAL..’. If there is no cartrige installed, or no paper, the display shows ‘NO CARTRIDGE’ or ‘PAPER EMPTY’.

To turn the machine off, unplug the power cord.

Note: If documents are deleted from memory due to a power failure, the machine automatically prints out a Power Failure report when power is reapplied.

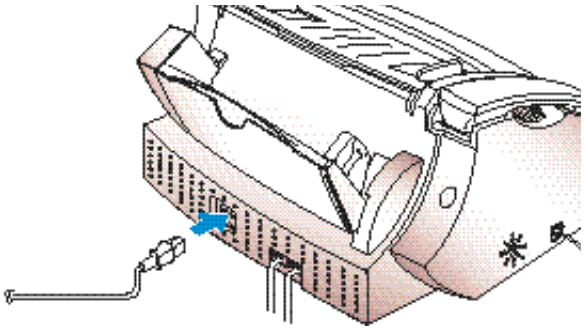

3-1-8. Backup Battery (SF3000T only)

1. Lift the control panel À and open the cartridge compartment cover ` .

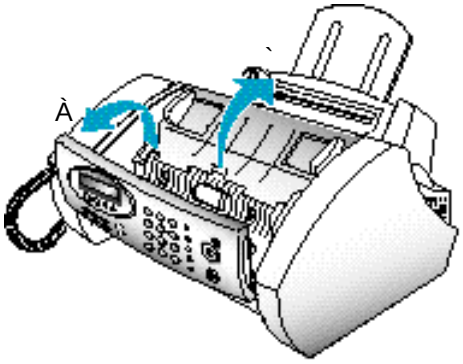

2. Remove the old battery, if necessary.

   Connect the new battery to the clips.

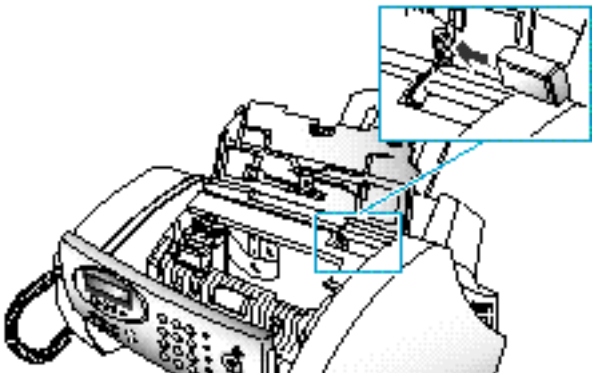

3. Insert the battery into the battery slot.

   The battery maintains setup configuration and messages when a power failure occurs or when power is accidentally disconnected.

   We recommend you use an alkaline battery because it lasts longer than a conventional battery.

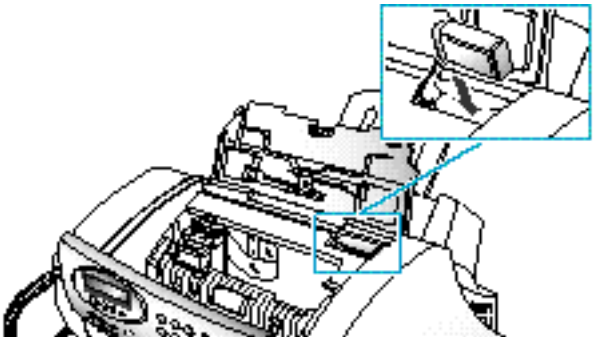

4. Close the cartridge compartment cover, and close the control panel.

   The battery can maintain the internal memory for about 20 hours. If the backup battery is weak or missing, the LCD displays a warning message.

3-2. Loading Paper

The display shows ‘PAPER EMPTY’ when paper is not loaded. You can load approximately 100 sheets of paper.

1. Pull the paper support on the paper bin all the way up.

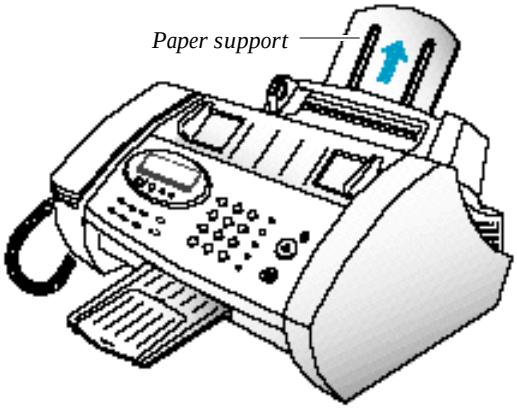

2. Fan and insert the paper, with the printing side facing you.

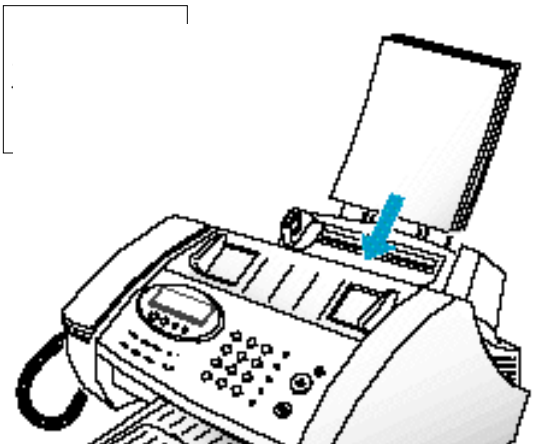

3. Squeeze the left paper guide and move it to the right to match the width of the paper.

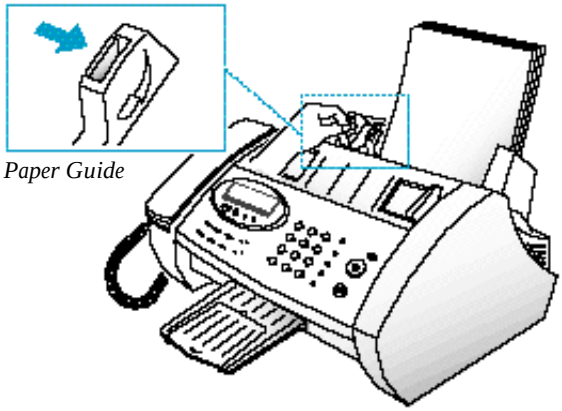

Note: The machine is preset to load A4-size paper. To load letter or legal-size paper, you have to set ‘PAPER SIZE’ option to the desired size.

3-3. Installing Print Cartridge

When the machine is powered up without the print cartridge installed, the LCD displays 'NO CARTRIDGE '.

1. Press Menu.

2. Press ▲ or ▼ until '1.CHANGE CART.' is displayed, then press Start/Copy.

3. Lift the control panel À, and open the cartridge compartment cover ` .

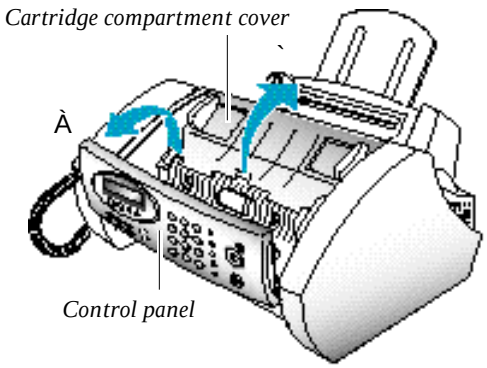

4. Remove the new print cartridge from its packaging. Hold by the black areas or colored top only. Do not touch the copper area.

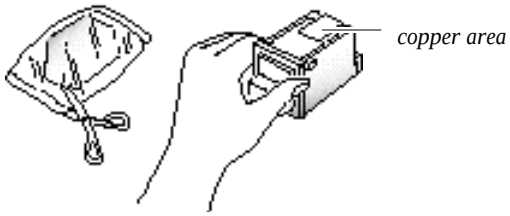

5. Carefully remove the tape covering the printhead. Be sure to remove all the tape.

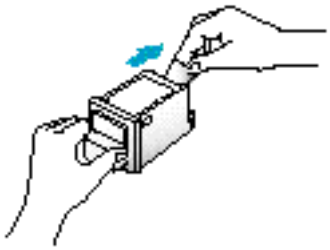

6. Insert the print cartridge in the carrier.

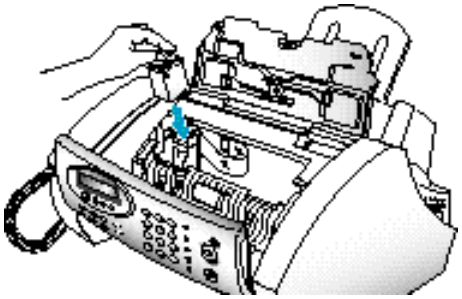

7. Push the cartridge firmly in the direction of the arrow until it clicks into place.

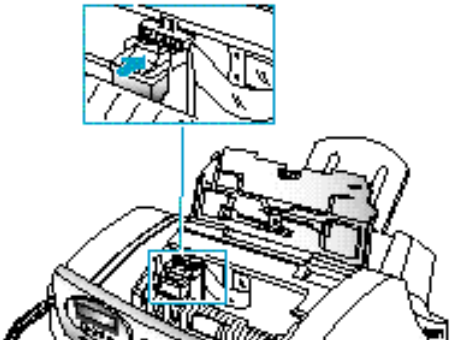

8. After installing the print cartridge, close the cover and replace the control panel.

9. The display shows ':NEW :USED.' Press Start/Copy to confirm 'NEW'. (For used cartridge, press ▲ or ▼ then press Start/Copy.) The display briefly shows 'MONO INSTALLED.'

   If the cartridge is not installed properly, 'NO CARTRIDGE' is displayed. Remove the cartridge and re-insert it.

10. The display asks if you want to run a SELF TEST. Press Start/Copy to run the printer self test.

    If you press Stop, the machine returns to Standby mode.

11. The machine prints out a test pattern of the printer.

Memo